Schumacher

CAT PB

Driver: Steven	**Date:** 09.25	**Event/Track:** Sonntagsfahrer	
Qualify:	**Final:**	**Best Lap:** 24.7 sec	

TRACK TYPE

Grip Level	High ☒ Medium ☐ Low ☐
Type	Tight ☐ Open ☐ Mixed ☒
Condition	Flat ☐ Bumpy ☒ Mixed ☐
Surface	Clay ☐ Long Astro ☒ Carpet ☐ Grass ☐ Short Astro ☐ Mixed ☐
Weather	trocken 27°

TYRES

	FRONT	REAR
Tyres	Mezzo gelb	Mezzo gelb
Wheels	Schumacher	Schumacher
Inserts	RRP	RRP

Notes:
2in3out&kleber

Notes:

FRONT SUSPENSION

KEY: **P** = Plastic, **A** = Alloy, **B** = Brass, **CF** = Carbon Fibre, **S2** = Schumacher Composite, **M** = Medium, **S** = Stiff, **Sh** = Short, **H** = High, **L** = Low, **F** = Front, **R** = Rear, **Y** = Yes, **N** = No

Ride Height	16 mm
Toe	1 deg In ☐ Out ☒
Camber at Ride Height	1,5 deg
ARB	N/A ☐ 1.0 ☐ 1.1 ☐ 1.2 ☐ 1.4 ☐ 1.6 ☐ 1.8 ☐ 1.9 ☐ 2.0 ☒ 2.1 ☐
Driveshaft Type	CVD ☐ Roche ☒ U/J ☐
Steering Arm	Kit ☒ 1 Dot ☐ 2 Dot ☐ 3 Dot ☐

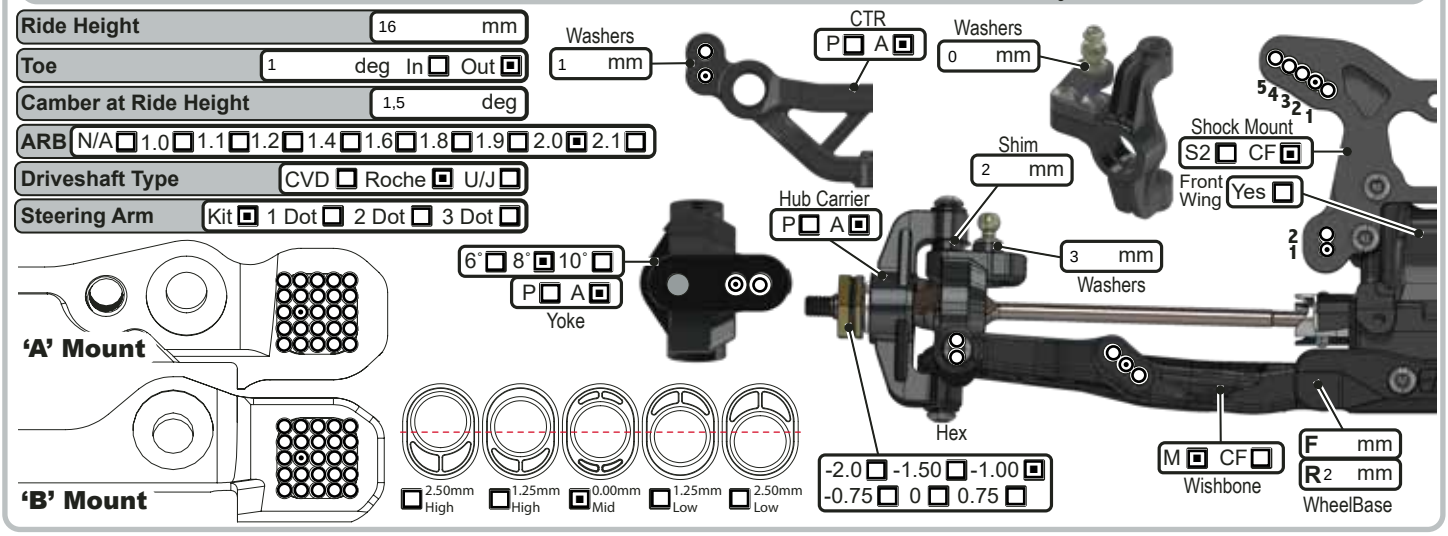

REAR SUSPENSION

KEY: **P** = Plastic, **A** = Alloy, **B** = Brass, **CF** = Carbon Fibre, **S2** = Schumacher Composite, **M** = Medium, **S** = Stiff, **Sh** = Short, **H** = High, **L** = Low, **F** = Front, **R** = Rear, **Y** = Yes, **N** = No

Ride Height	16 mm
Camber at Ride Height	1,5 deg
ARB	N/A ☐ 1.0 ☐ 1.1 ☐ 1.2 ☐ 1.4 ☐ 1.6 ☐ 1.8 ☐ 1.9 ☐ 2.0 ☒ 2.1 ☐
Wing Gurney Height	0 mm
Driveshaft Type	CVD ☐ U/J ☒
High Roll Centre Straps	Y ☐ N ☒

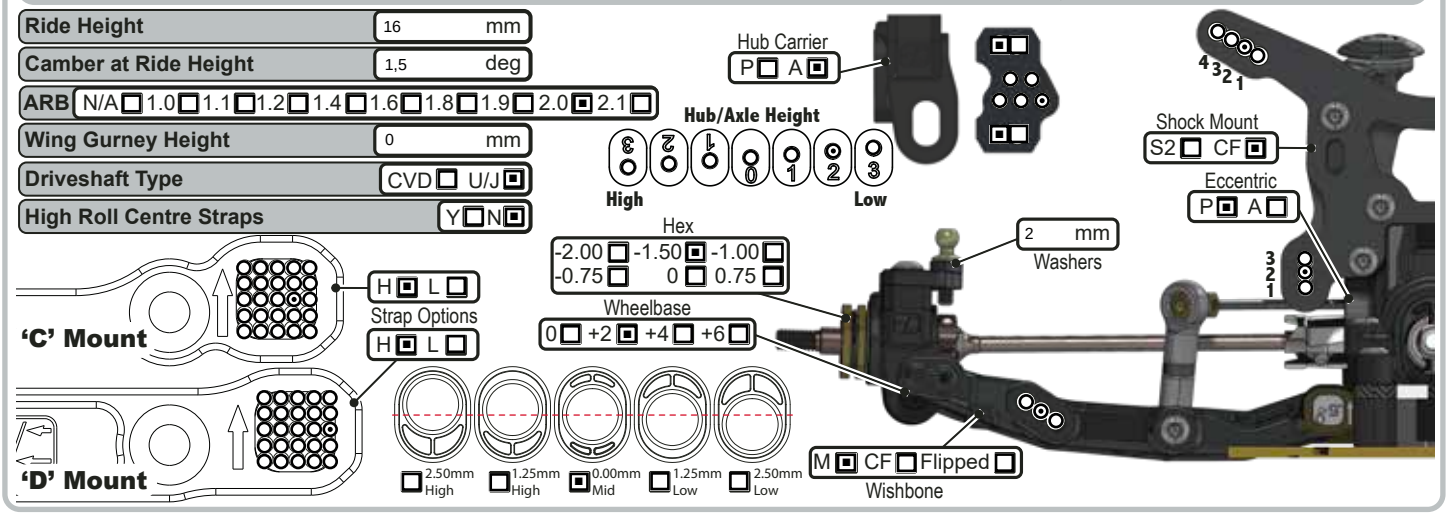

TRANSMISSION

Lock Out	Y ☐ N ☐
Slipper Plates	2 ☐ 3 ☐

Differential Oil

Front (cSt)	Centre (cSt)	Rear (cSt)
10 k	k	10 k
Gears 2 ☐ 4 ☒	Gears 2 ☐ 4 ☐	Gears 2 ☐ 4 ☒

Centre Transmission

F.A.B	Lock Out	Gear Diff
Y ☒ N ☐	Y ☒ N ☐	Y ☐ N ☐

Notes:
loctite 270 grün

EQUIPMENT

E.S.C.	HW
Servo	GTS3
RX	Sanwa
LiPo	220gr
Bodyshell	F2
Wing	Kit
Motor	10,5
Timing	35 deg
Pinion	24 T
Spur	71 T

CHASSIS

LiPo Position	1 ☒ 2 ☐ 3 ☐
Running Weight	1622 g
Front Deck	Y ☒ N ☐
Rear Deck	Y ☒ N ☐
Chassis Length	S ☒ L ☐

WEIGHTS

Notes:

SHOCKS

KEY: **i** = Internal, **e** = External, **V** = Vented, **S** = Sealed, **A** = Aeration

	FRONT	REAR
Cap	V ☐ S ☐ A ☒	V ☐ S ☐ A ☒
Kashima	Y ☒ N ☐	Y ☒ N ☐
Oil	550 cSt	450 cSt
Piston	2x1,7	2x2,1
Spring	orange agile lb/in	black agile lb/in
Limiters (i)	mm	1 mm
Stroke	22,5 mm	27 mm
Limiters (e)	oring mm	oring mm
Stand Off	mm	3 mm